PART #	"A" ±.015	THD "B"
4300	.250	4–40
4300J	.625	4–40
4301	.250	6–32
4301J	.625	6–32
4302	.250	8–32
4303	.375	4–40
4304	.375	6–32
4305	.375	8–32
4306	.500	4–40
4307	.500	6–32
4308	.500	8–32
4309	.750	4–40
4310	.750	6–32
4311	.750	8–32
4312	.875	4–40
4313	.875	6–32
4314	.875	8–32
4315	1.000	4–40
4316	1.000	6–32
4317	1.000	8–32

REVISIONS				
SYM	DESCRIPTION	REVISED BY	DATE	APPR

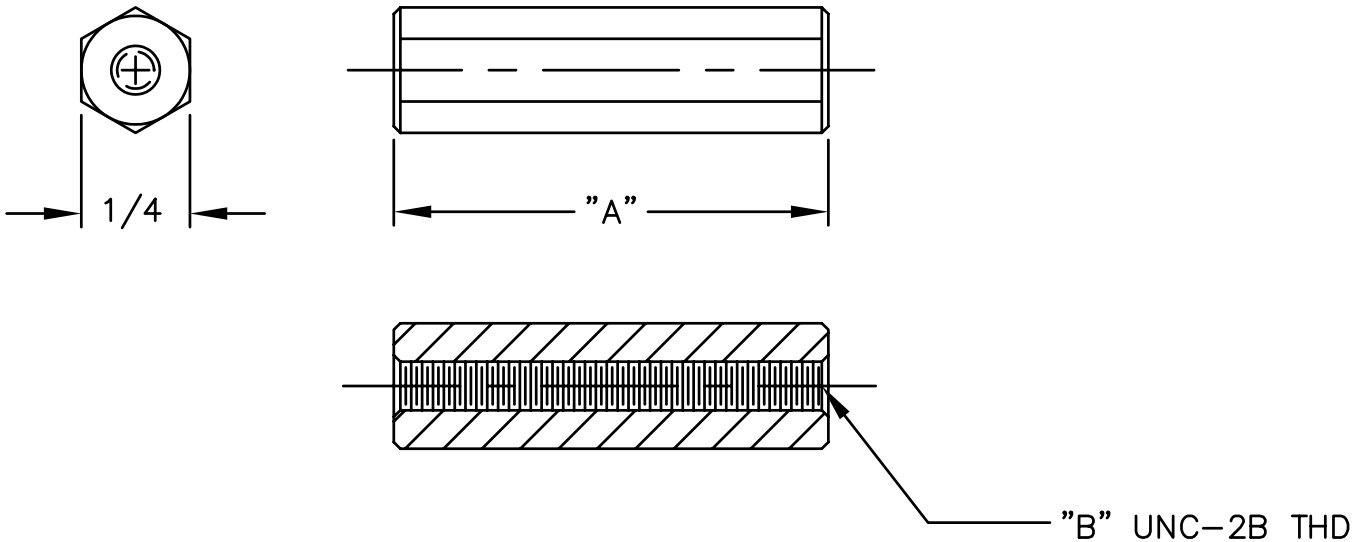

NOTE: STANDOFFS 3/4" & LONGER, THD IS TAPPED 3/8" FROM EACH END & IS NON–CONTINUOUS

MATERIAL: NYLON 6/6		FINISH: NATURAL	
DIMENSIONAL TOLERANCES UNLESS OTHERWISE SPECIFIED			TITLE: 1/4" HEX NYLON STANDOFF #4, #6, #8 THREADS CUSTOMER SALES DRAWING
.XX	.XXX	.XXXX	
---	---	---	
FRACTIONS	ANGLES	SCALE	
---	---	2:1	
HEAT TREAT: CODE 0			DRAWN: T. LORD DATE: 4/4/11
PLOT SCALE: 1:1			CHECKED: T. LORD DATE: 4/4/11
			APPROVED: T. LORD DATE: 4/4/11

ABBATRON

Electronic Connectors and Hardware

13680 S. MOSIERTOWN RD
MEADVILLE, PA 16335

SIZE	DRAWING NUMBER	ISSUE
A	SD: 4300-4317	-