THIS DRAWING IS UNPUBLISHED. RELEASED FOR PUBLICATION 20
© COPYRIGHT 20 TE CONNECTIVITY ALL RIGHTS RESERVED.

LOC	DIST
-	-

REVISIONS

P	LTR	DESCRIPTION	DATE	DWN	APVD
	A	RELEASED	05JUL2012	CW	PY
	A1	ECR-12-015933	10SEP2012	CW	PY
	A2	ECR-12-016601	18OCT2012	CW	PY

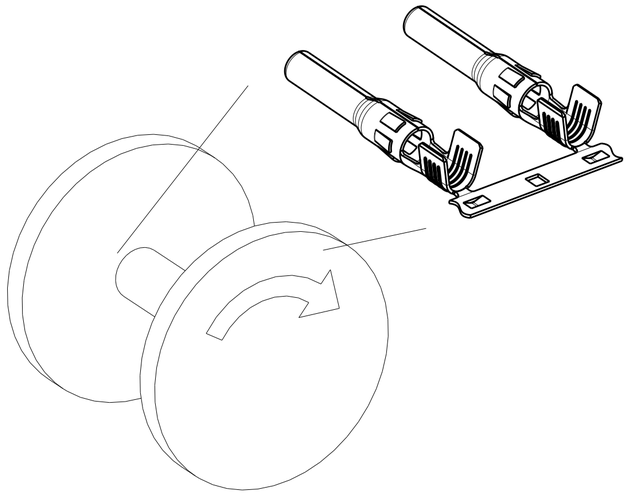

STRIP CONTACT COME OFF TO ASSEMBLY
2000 PCS CONTACTS MOUNTED REEL
REEL TYPE SUBJECT TO ALTERNATION

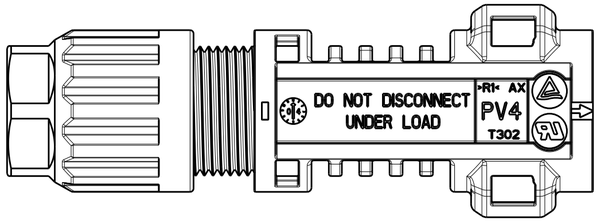

PREASSEMBLED AS SHOWN

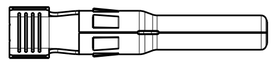

PIN CONTACT (LOOSE PIECE)

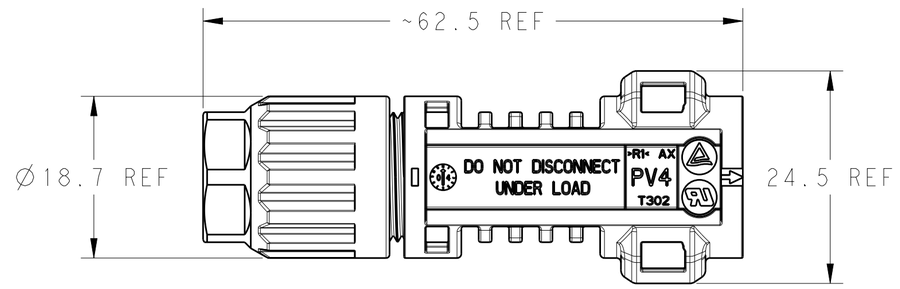

ASSEMBLED AS SHOWN

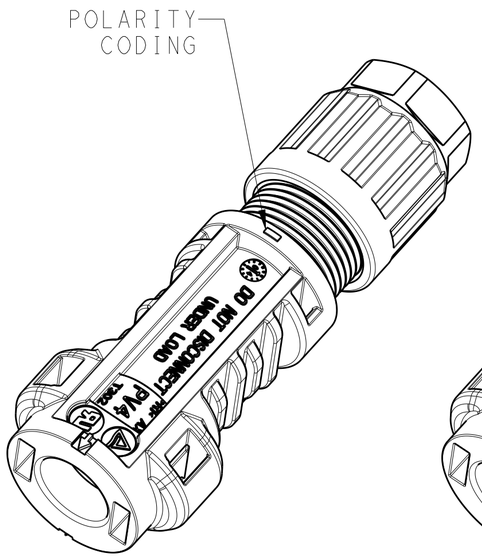

-1 AS SHOWN

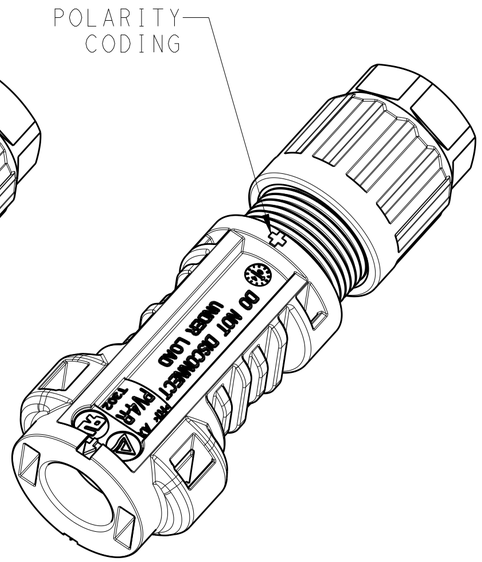

-3 AS SHOWN

1.SPEFIFICATION

CABLE CONDUCTOR SIZE	4.0MM2/AWG12	6.0MM2/AWG10
RATED CURRENT (AT 85°C AMBIENT)	UL 20A DC TUV 35A DC	UL 30A DC TUV 40A DC
RATED VOLTAGE	UL 600V&1000V DC / TUV 1000V DC	
DEGREE OF PROTECTION,MATED	IP 68 (1m,24h)	
AMBIENT TEMPERATURE RANGE	-40°C~+85°C	
OVERVOLTAGE CATEGORY	III	
POLLUTIOIN DEGREE	2	
CONTACT RESISTANCE	0.5mΩ	
CONTACT MATERIAL	COPPER,TIN PLATED	
INSULATION MATERIAL	THERMOPLASTIC, UL94-V0	
SAFETY CLASS	II	
STRIP LENGTH	6.5mm	
CABLE JACKET DIAMETER	4.5~8.0mm	

2.CONTACT SHOWN UNINSTALLED, FOR REFERENCE ONLY

3.USE ONLY CRIMP TOOL OF TE CONNECTIVITY TO CRIMP CONTACT

POLARITY CODING	CABLE JACKET DIAMETER	CONTACT TYPE	TE P/N	ORDER No.	PACKAGING
				FOR ORDER	
MINUS(-)	4.5mm~6.2mm	LOOSE PIECE	2-1971861-2	2-1971861-2	100
MINUS(-)	5.8mm~8.0mm	LOOSE PIECE	2-1971861-1	2-1971861-1	100
PLUS(+)	4.5mm~6.2mm	STRIP	1-1971861-4	1971914-4&1971857-2	1000&2000
PLUS(+)	5.8mm~8.0mm	STRIP	1-1971861-3	1971914-3&1971857-2	1000&2000
MINUS(-)	4.5mm~6.2mm	STRIP	1-1971861-2	1971914-2&1971857-2	1000&2000
MINUS(-)	5.8mm~8.0mm	STRIP	1-1971861-1	1971914-1&1971857-2	1000&2000
PLUS(+)	4.5mm~6.2mm	LOOSE PIECE	1971861-4	1971861-4	1000
PLUS(+)	5.8mm~8.0mm	LOOSE PIECE	1971861-3	1971861-3	1000
MINUS(-)	4.5mm~6.2mm	LOOSE PIECE	1971861-2	1971861-2	1000
MINUS(-)	5.8mm~8.0mm	LOOSE PIECE	1971861-1	1971861-1	1000

THIS DRAWING IS A CONTROLLED DOCUMENT.

DIMENSIONS: mm

TOLERANCES UNLESS OTHERWISE SPECIFIED:
0 PLC ±-
1 PLC ±-
2 PLC ±-
3 PLC ±-
4 PLC ±-
ANGLES ±-

MATERIAL -
FINISH -

DWN CHRIS WANG 05APR2012
CHK ROJAY CHEN 08MAR2012
APVD PETER YIN 08MAR2012
PRODUCT SPEC 108-106078
APPLICATION SPEC 114-106078
WEIGHT -

TE Connectivity

NAME
PIN CONNECTOR KITS (MALE)
(PV4-A*)
SOLARLOK PV4 CONNECTOR

SIZE	CAGE CODE	DRAWING NO	RESTRICTED TO
A2	00779	C-1971861	-

CUSTOMER DRAWING
SCALE 2:1 SHEET 1 OF 1 REV A2