SKEG

6mm Square (Snap-in Type)

Switch with soft operating feel available also as joint stem and sidepush types

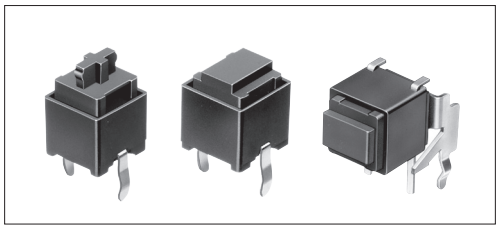

Typical Specifications

Items	Specifications
Rating (max.)	5mA 12V DC
Rating (min.)	10μA 1V DC
Initial contact resistance	1kΩ max.
Travel (mm)	1

Product Line

Toppush Type

Product No.	Operating force	Operating direction	Operating life (1mA 5V DC)	Stem color	Stem	Minimum order unit (pcs.) Japan	Minimum order unit (pcs.) Export	Drawing No.
SKEGACA010	0.78N	Toppush	100,000 cycles	Ivory	Joint stem	1,000	1,000	1
SKEGAEA010	1.96N			Dark gray				
SKEGADA010	0.78N			Ivory	Flat stem			2
SKEGAFA010	1.96N			Dark gray				

Sidepush Type

Product No.	Operating force	Operating direction	Operating life (1mA 5V DC)	Stem color	Minimum order unit (pcs.) Japan	Minimum order unit (pcs.) Export	Drawing No.
SKEGLAA010	0.78N	Sidepush	50,000 cycles	Black	1,000	1,000	3
SKEGLBA010	1.96N			Dark gray			

Packing Specifications

Bulk

Number of packages (pcs.) 1 case / Japan	Number of packages (pcs.) 1 case / export packing	Export package measurements (mm)
10,000	30,000	309 × 476 × 347

Dimensions

Unit:mm

No.	Photo	Style	PC board mounting hole dimensions (Viewed from switch mounting face)
1	Joint stem type 	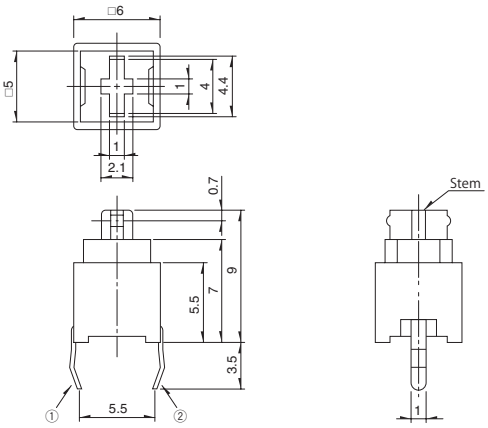	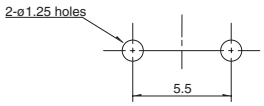

Refer to **P.288** for soldering conditions.

Dimensions

Unit:mm

No.	Photo	Style	PC board mounting hole dimensions (Viewed from switch mounting face)
2	Flat stem type 	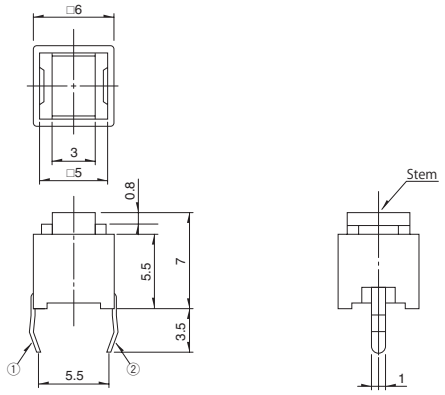	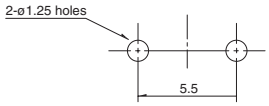
3	Sidepush type 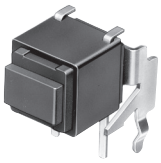	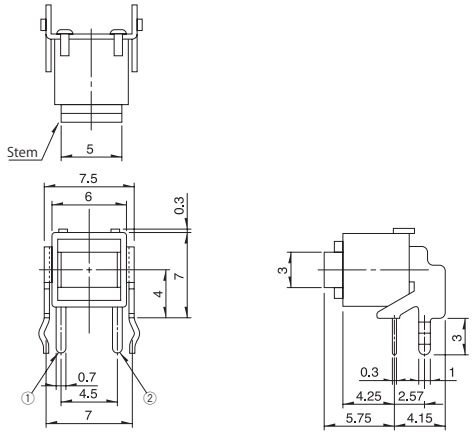	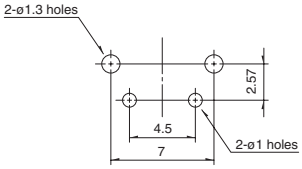

Circuit Diagram

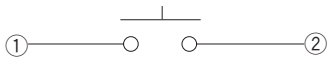

Note

Please use 1.6mm thick PC boards. (For horizontal type, 1.0mm)

Product Line of Knobs

Unit:mm

Applicable model	Dimensions		Variety			Label dimensions (Unit:mm)
			Color	Model		
			Cap			
			Clear	SK2AA00540		
			Keytop		Keytop+Cap	
SKEG Applicable to joint stem type		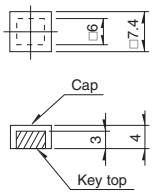	Red Blue Ivory Black Yellow	SK2AA00310 SK2AA00320 SK2AA00330 SK2AA00340 SK2AA00350	SK2AA00360 SK2AA00370 SK2AA00380 SK2AA00390 SK2AA00400	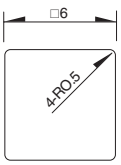 Thickness 0.1

Notes

1. The knob will be delivered together with the switch but packed separately.
2. The label is not included.

List of Varieties

Type		Sharp Feeling Type			Soft Feeling Type							
		Radial			Snap–in			Surface Mount			Radial	
Series		**SKRG**	**SKGK**	**SKRC**	**SKEG**	**SKEG**	**SKPF**	**SKPM**	**SKPG**	**SKPR**	**SKPL**	**SKPD**
Photo			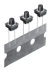					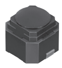				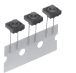
Features		Round terminal type	—	Round terminal type	—	—	High operation force and long travel	Low contact resistance	—	High operation force and Low contact resistance	Round terminal and low contact resistance	—
Water-proof		—	—	●	—	—	—	—	—	—	—	—
Dust-proof		—	—	●	—	—	—	—	—	—	—	—
Operating direction	**Toppush**	●	●	●	●	—	●	●	●	●	●	●
	Sidepush	—	—	—	—	●	—	—	—	—	—	—
Dimensions (mm)	**W**	ϕ6.2	□6.6	ϕ9	□6	7.5	8	5.9	6.6	7.5	ϕ6.45	□7.8
	D					9.9	9	6	6.3	7.8		
	H	4.3	5	13	7	7.3	10	5		6.5	5	
Contact		—	—	—	Carbon			Silver	Carbon	Silver	Carbon	
Operation force coverage	**~1N**		↕		↕	↕						↕
	1N~2N	↕	↕	↕	↕	↕	↕	↕	↕		↕	↕
	2N~3N	↕		↕			↕	↕	↕		↕	↕
	3N~4N						↕					
	4N~5N									↕		
Travel (mm)		0.25			1		※1	1.3		1	1.3	※1
Ground terminal		—	—	—	—	—	—	—	—	—	—	—
Operating temperature range		-40℃ to +90℃	-20℃ to +70℃	-40℃ to +90℃	-20℃ to +70℃		-40℃ to +90℃					
Automotive use		●	—	—	—	—	●	●	●	●	●	●
Life Cycle		★2	★2	★2	★2	★2	★2	★3	★3	★3	★2	★2
Electrical performance	**Rating (max.) (Resistive load)**	50mA 12V DC			5mA 12V DC			50mA 16V DC	5mA 12V DC	50mA 16V DC		5mA 12V DC
	Rating (min.) (Resistive load)	10μA 1V DC			10μA 1V DC							
	Insulation resistance	100MΩ min. 100V DC for 1min.			100MΩ min. 100V DC for 1min.							
	Voltage proof	250V AC for 1min.			250V AC for 1min.							※2
Durability	**Vibration**	10 to 55 to 10Hz/min., the amplitude is 1.5mm for all the frequencies, in the 3 direction of X, Y and Z for 2hours respectively			10 to 55 to 10Hz/min., the amplitude is 1.5mm for all the frequencies, in the 3 direction of X, Y and Z for 2hours respectively							※3
	Lifetime	Shall be in accordance with individual specifications.			Shall be in accordance with individual specifications.							
Environmental performance	**Cold**	-40±2℃ for 96h	-30±2℃ for 96h	-40±2℃ for 96h	-30±2℃ for 96h		-40±2℃ for 96h	-30±2℃ for 96h			-40±2℃ for 1000h	-40±2℃ for 96h
	Dry heat	90±2℃ for 96h	80±2℃ for 96h	90±2℃ for 96h	80±2℃ for 96h		90±2℃ for 96h	80±2℃ for 96h			90±2℃ for 1000h	90±2℃ for 96h
	Damp heat	60±2℃, 90 to 95%RH for 96h		60±2℃, 90 to 95%RH for 1000h	60±2℃, 90 to 95%RH for 96h						60±2℃, 90 to 95%RH for 1000h	60±2℃, 90 to 95%RH for 96h
Page		277	278	279	280	280	282	283	284	285	286	287

W : Width. The most outer dimension excluding terminal portion.
D : Depth. The most outer dimension excluding terminal portion.
H : Height. The minimum dimension if there are variances.

● TACT Switch™ Soldering Conditions · 288
● TACT Switch™ Cautions · 289

Notes

1. The automotive operating temperature range to be individually discussed upon request.
2. ● indicates applicability to all products in the series.
3. ※1 See the relevant pages for respective product descriptions
4. ※2 50MΩ min. 100V DC for 1min. SKPDAF:100MΩmin. 100V DC for 1min.
5. ※3 100V AC for 1min.SKPDAF:250V DC for 1min.

TACT Switch™ Soldering Conditions

Condition for Reflow

Available for Surface Mount Type.

1. Heating method: Double heating method with infrared heater.
2. Temperature measurement: Thermocouple 0.1 to 0.2 φ CA (K) or CC (T) at solder joints (copper foil surface) .
   A heat resistive tape should be used to fix thermocouple.
3. Temperature profile

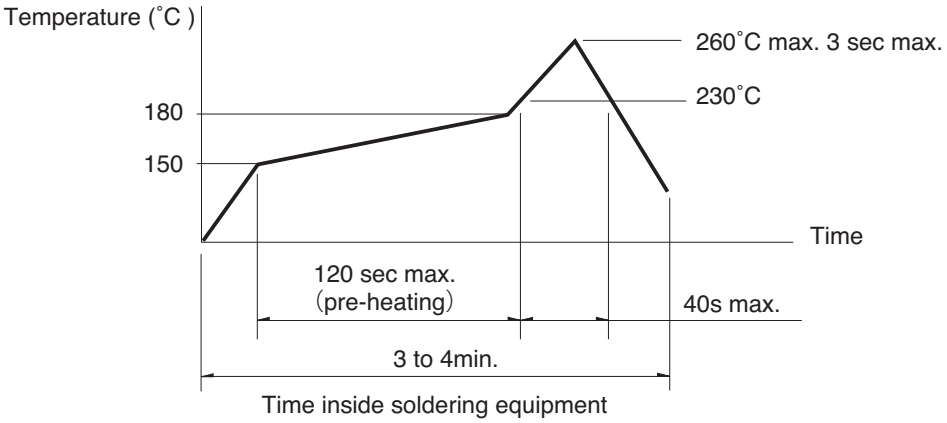

Notes

1. The above temperature shall be measured of the top of switch. There are cases where the PC board's temperature greatly differs from that of the switch, depending on the material, size, thickness of PC boards and others. The above-stated conditions shall also apply to switch surface temperatures.
2. Soldering conditions differ depending on reflow soldering machines. Prior verification of soldering condition is highly recommended.

Conditions for Auto-dip

Available for Snap-in Type and Radial Type

Items	Condition
Flux built-up	Mounting surface should not be exposed to fluk
Preheating temperature	Ambient temperature of the soldered surface of PC board. 100℃ max.
Preheating time	60s max.
Soldering temperature	260℃ max.
Duration of immersion	5s max.
Number of soldering	2times max.

SKHH、SKPD Series

Items	Condition
Flux built-up	Mounting surface should not be exposed to fluk
Preheating temperature	Ambient temperature of the soldered surface of PC board. 110℃ max.
Preheating time	60s max.
Soldering temperature	260℃ max.
Duration of immersion	5s max.
Number of soldering	2times max.

SKQJ、SKQK、SKEG Series

Items	Condition
Flux built-up	Mounting surface should not be exposed to fluk
Preheating temperature	Ambient temperature of the soldered surface of PC board. 100℃ max.
Preheating time	45s max.
Soldering temperature	255℃ max.
Duration of immersion	5s max.
Number of soldering	2times max.

Manual Soldering (Except SKRT Series)

Items	Condition
Soldering temperature	350℃ max.
Duration of soldering	3s max.
Capacity of soldering iron	60W max.

SKHH、SKHW、SKRG、SKPD Series

Items	Condition
Soldering temperature	360℃ max.
Duration of soldering	3s max.
Capacity of soldering iron	60W max.

SKQJ、SKQK、SKEG Series

Items	Condition
Soldering temperature	350℃ max.
Duration of soldering	3s max.
Capacity of soldering iron	20W max.

Notes

1. Consult with us for availability of TACT Switch™ washing.
2. Prevent flux penetration from the top side of the TACT Switch™.
3. Switch terminals and a PC board should not be coated with flux prior to soldering.
4. The second soldering should be done after the switch is stable with normal temperature.
5. Use the flux with a specific gravity of min 0.81.
   (EC-19S-8 by TAMURA Corporation, or equivalents.)