IEC Connector C15 for hot conditions 120°C, Rewireable, Angled

Rewireable connector

Example with assembled cable

C15

120° C

Description

- Cord Connectors (rewireable):
  Screw-on mounting
- 1 Function:

- Connector, Pin temperature 120 °C, Protection class I
- Cable

Approvals

- VDE Certificate Number: 40031778
- UL File Number: E96454
- CSA File Number: 56242

References

Substitute for type 8111; 8943.LW

Weblinks

pdf-datasheet, html-datasheet, General Product Information, RoHS, CHINA-RoHS, REACH, Distributor-Stock-Check, Accessories, Detailed request for product

Technical Data

Ratings IEC	10 A / 250 VAC; 50 Hz
Ratings UL/CSA	15 A / 250 VAC; 60 Hz
Dielectric Strength	> 2 kVAC between L-N > 2 kVAC between L/N-PE (1 min/50 Hz)
Allowable Operation Temp.	-25 °C to 120 °C
Protection Class	Suitable for appliances with protection class I acc. to IEC 61140
Terminal	Cable
Material: Housing	Thermoplastic, black, UL 94V-0

Connector	C15 acc. to IEC 60320-1, UL 498, CSA C22.2 no. 42 (for hot conditions) pin-temperature 120 °C, 10 A, Protection Class I

Dimensions

4784

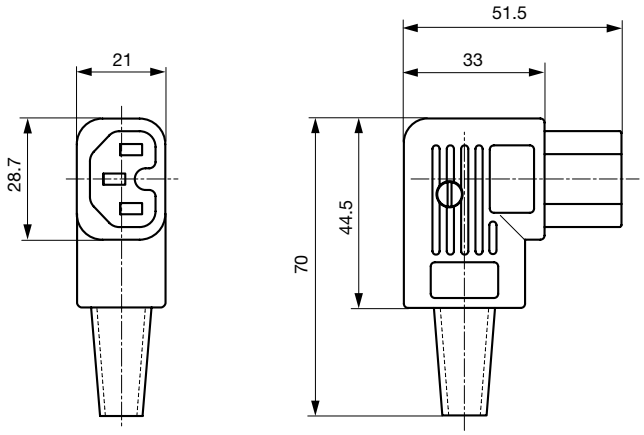

All Variants

Color	Max. cable diameter	Max. wire size	Order Number
black	8.5 mm	3 x 1 mm² / 3 x 18 AWG	4784.0000
black	10 mm	3 x 2.1 mm² / 3 x 14 AWG	4784.0100

Max. torque for screws: Terminals: 0.5 Nm, Cable clamps: 0.3 Nm, Cover: 0.3 Nm

Packaging unit 100 Pcs

Mating Inlets/Plugs

Category / Description

Appliance Inlet Overview complete

6100-3, Mounting: Screw, Solder terminals or quick connect terminals, Appliance Inlet: IEC C14	6100-3
6100-4, Mounting: Snap-in, Solder terminals or quick connect terminals, Appliance Inlet: IEC C14	6100-4
IEC Appliance Inlet C18, Screw-on Mounting, Front or Rear Side, Solder or Quick-connect Terminal	6102-3
IEC Appliance Inlet C18, Snap-in Mounting, Front Side, Solder or Quick-connect Terminal	6102-5
G-Stecker, Mounting: Appliance Inlet : IEC C14 Without fuse holder	6150
Appliance Inlet further types to 4784	...

Distribution Unit Overview complete

Distribution Unit for Snap-in Mounting with 1 IEC Appliance Inlet C14 and 1 Appliance Outlet F	0712
Distribution Unit with 1 IEC Appliance Inlet C14 and 2 Appliance Outlets F, Shuttered	4741
Distribution Unit with 1 IEC Appliance Inlet C14 and 4 Appliance Outlets F	4747
Distribution Unit with 1 IEC Appliance Inlet C14 or Power Cord, 5 or 6 IEC Appliance Outlets F and Extra Components	4740
EMC Power Strip with Line Filter	FLBB
Distribution Unit further types to 4784	

Plug Overview complete

IEC Plug E, Cord Connector (Rewireable), Straight, max. cable Diameter 8.5 mm	4732
IEC Plug E, Cord Connector (Rewireable), Straight, max. Cable Diameter 10 mm	4735
IEC Plug E, Cord Connector (Rewireable), Straight	9009
IEC Plug E, Cord Connector (Rewireable), Angled, max. Cable Diameter 8.5 mm	4733
IEC Plug E, Cord Connector (Rewireable), Angled, max. Cable Diameter 10 mm	4736
Plug further types to 4784	...

Power Entry Module Overview complete

DC11, Mounting: Screw, Rocker switch: non-illuminated or illuminated 1 or 2 pole, Quick connect terminals 4.8 x 0.8 mm, Appliance Inlet: IEC C14, Without fuse holder: Suitable for appliances with protection class I or II	DC11
KEB1, Mounting:Screw, Quick connect terminals 4.8 x 0.8 mm, Without fuse holder: Rocker switch, non-illuminated or illuminated, red, 1-pole, Appliance Inlet: IEC C14, 250 VAC, prewired, Suitable for appliances with protection class I	KEB1
KEB2, Mounting:Screw, Quick connect terminals 4.8 x 0.8 mm, Without fuse holder: Rocker switch, non-illuminated or illuminated, 2-pole, Appliance Inlet: IEC C14, 250 VAC, prewired, Suitable for appliances with protection class I	KEB2
DC21, Mounting: Screw Rear Side, Rocker switch: non-illuminated or illuminated 2-pole, Quick connect terminals 4.8 x 0.8 mm Appliance Inlet: IEC C14, Without fuse holder:	DC21
DD11, Mounting: Screw-on mounting, Rocker switch: non-illuminated or illuminated 2-pole, Quick connect terminals 4.8 x 0.8 mm, Appliance Inlet: IEC C14, With or without protection cover, Fuse holder: 1 or 2 pole, Suitable for appliances with protection class I	DD11
Power Entry Module further types to 4784	...

Category / Description

Power Entry Module with line filter Overview complete

KFB1, Mounting: Screw, Front Side, Filter: Standard Version, Without fuse holder: 10 A, Rocker switch: 1-pole, Appliance Inlet: IEC C14, prewired	KFB1
KFB2, Mounting: Screw, Front Side, Filter: Standard and Medical Version, Without fuse holder: 10 A, Rocker switch: 2-pole, Appliance Inlet: IEC C14, prewired	KFB2
DC12, Mounting: Screw, Front-/Rear-Side, Filter, Standard and Medical Version, Without fuse holder:10 A, Rocker switch: 1 or 2 pole, non-illuminated or illuminated Appliance Inlet: IEC C14, prewired	DC12
DC22 Mounting: Screw, Rear Side, PCB, 10 A, Filter: Standard and Medical Version, Without fuse holder: Rocker switch: 1 or 2 pole, non-illuminated or illuminated, Appliance Inlet: IEC C14, Suitable for appliances with protection class I	DC22
DD12, Mounting: Screw-on mounting, Front Side, Filter, Standard and Medical Version, Fuse holder:1 or 2 pole, 10 A, Rocker switch: 2-pole, non-illuminated Appliance Inlet: IEC C14, prewired	DD12
Power Entry Module with line filter further types to 4784	...

14.07.2016

The specifications, descriptions and illustrations indicated in this document are based on current information. All content is subject to modifications and amendments. Information furnished is believed to be accurate and reliable. However, users should independently evaluate the suitability and test each product selected for their own applications.