BILL OF MATERIALS				
DET.	QTY.	DESCRIPTION	MATERIAL	FINISH
1	1	BODY	BRASS	NICKEL
2	1	SLEEVE	BRASS	NICKEL
3	1	HANDLE	NYLON	–

REVISIONS				
SYM	DESCRIPTION	REVISED BY	DATE	APPR

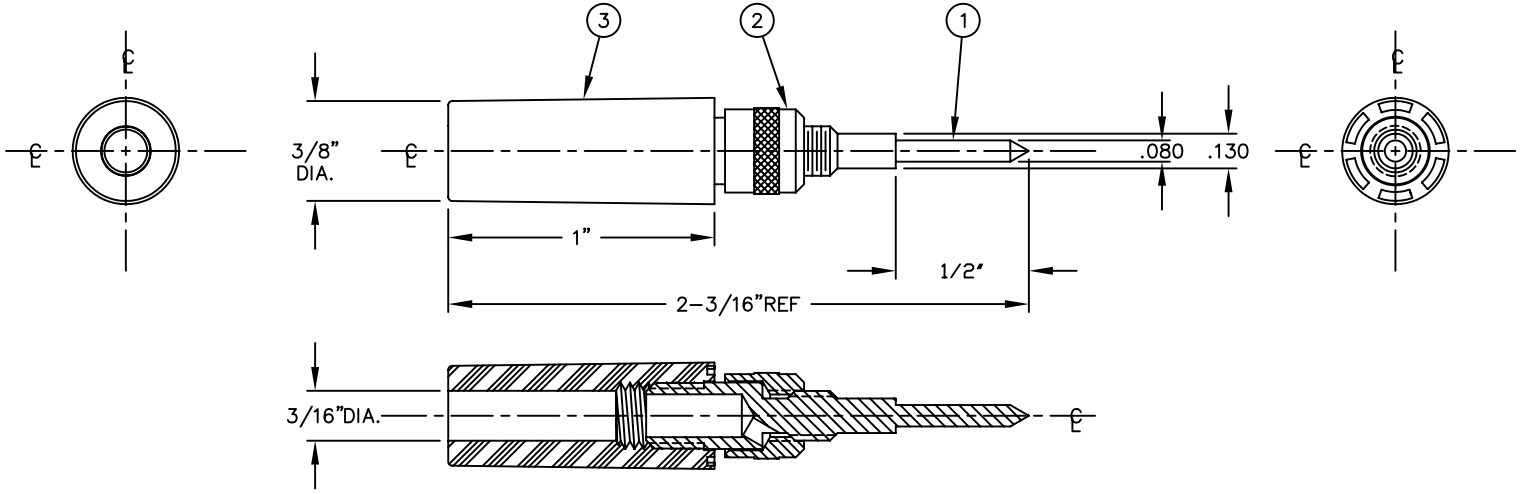

FULL SECTION VIEW

TIP PLUG ASSEMBLY		
PART NO.	FINISH	CID NO.
200–101	WHITE	
200–102	RED	AA55469/5–02 (A)
200–103	BLACK	AA55469/5–01 (A)
200–104	GREEN	
200–105	BLUE	
200–107	YELLOW	

MATERIAL: SEE TABLE

FINISH: SEE TABLE

DIMENSIONAL TOLERANCES UNLESS OTHERWISE SPECIFIED

.XX	.XXX	.XXXX
---	---	---
FRACTIONS	ANGLES	SCALE
---	---	4:1

HEAT TREAT: ---

PLOT SCALE: 1=1

TITLE: 200 SERIES INSULATED– PHONE TIP PLUG ASSENBLY

DRAWN: E.McKINNEY DATE: 12–21–98

CHECKED: E.McKINNEY DATE: 12–21–98

APPROVED: DATE:

ABBATRON

Electronic Connectors and Hardware

632 Arch Street, Meadville, Pa. 16335

SIZE	DRAWING NUMBER	ISSUE
B	200	A