# Crydom

*See full Datasheet below...*

onlinecomponents.com
THE ONLINE DISTRIBUTOR OF ELECTRONIC COMPONENTS

BUY NOW

MASTER™ ELECTRONICS

BUY NOW

masterelectronics.com & onlinecomponents.com
are **authorized** e-commerce distributors
of electronic components.

crydom DataSheet **PCB Mount**

# CMX Series

- SIP SSR
- Ratings to 20A @ 60 VDC, 10A @ 100 VDC, 10A @ 60 VDC and 3A @ 200 VDC
- MOSFET output
- DC control
- Low on-state impedance
- CE Compliant to EN60950-1

## PRODUCT SELECTION

| Control Voltage | 3A | 5A | 6A | 10A | 10A | 20A |
|---|---|---|---|---|---|---|
| 3-10 VDC | CMX200D3 | CMX60D5 | CMX100D6 | CMX60D10 | CMX100D10 | CMX60D20 |
| 20-28 VDC | CMXE200D3 | CMXE60D5 | CMXE100D6 | CMXE60D10 | CMXE100D10 | CMXE60D20 |

## OUTPUT SPECIFICATIONS (1)(4)

| Description | | | | | | |
|---|---|---|---|---|---|---|
| Operating Voltage [VDC] | 0-200 | 0-60 | 0-100 | 0-60 | 0-100 | 0-60 |
| Maximum Off-State Leakage Current @ Rated Voltage [µAdc] | 100 | 100 | 100 | 100 (5) | 100 | 100 |
| Maximum Load Current [Arms] | 3 | 5 | 6 | 10 | 10 | 20 |
| Minimum Load Current [Arms] | 0 | 0 | 0 | 0 | 0 | 0 |
| Maximum On-State Resistence [Ohm] (2) | 0.20 | .10 | .040 | .018 | .010 | .0033 |
| Maximum Surge Current (10msec) [Apk] | 30 | 60 | 100 | 100 | 100 | 200 |
| Maximum On-State Voltage Drop @ Rated Current [VDC] | 0.6 | 0.5 | 0.24 | 0.18 | 0.1 | 0.1 |

## INPUT SPECIFICATIONS (1)

| Description | CMX | CMXE |
|---|---|---|
| Control Voltage Range | 3.0-10.0 VDC | 20-28 VDC |
| Must Turn On Voltage | 3.0 VDC | 20 VDC |
| Must Turn Off Voltage | 1 .0 VDC | 1 .0 VDC |
| Typycal Input Current | 15 mAdc @ 5 VDC | 12 mAdc @ 24 VDC |
| Nominal Input Impedance | 300 Ohm | 780 Ohm |
| Maximum Turn-On Time [msec] | 1.0 | 1.0 |
| Maximum Turn-Off Time [µsec] | 300 | 300 |

## GENERAL SPECIFICATIONS

| Description | Parameters |
|---|---|
| Dielectric Strength, Input/Output/Base (50/60Hz)(3) | 2500 Vrms |
| Minimum Insulation Resistance (@ 500 VDC)(3) | $10^9$ Ohm |
| Maximum Capacitance, Input/Output | 15 pF |
| Ambient Operating Temperature Range | -30 to 80°C |
| Ambient Storage Temperature Range | -30 to 125°C |
| Weight (typical) | 0.4 oz. (11g) |
| Encapsulation | Thermally Conductive Epoxy |

1) All parameters at 25°C unless otherwise specified.
2) @ rated current (RDS-ON)
3) Dielectric and insulation resistance are measured between input and output
4) Inductive loads should be diode suppressed
5) At 55 Vdc


Copyright © 2012 Crydom Inc. Specifications subject to change without notice.

## MECHANICAL SPECIFICATIONS

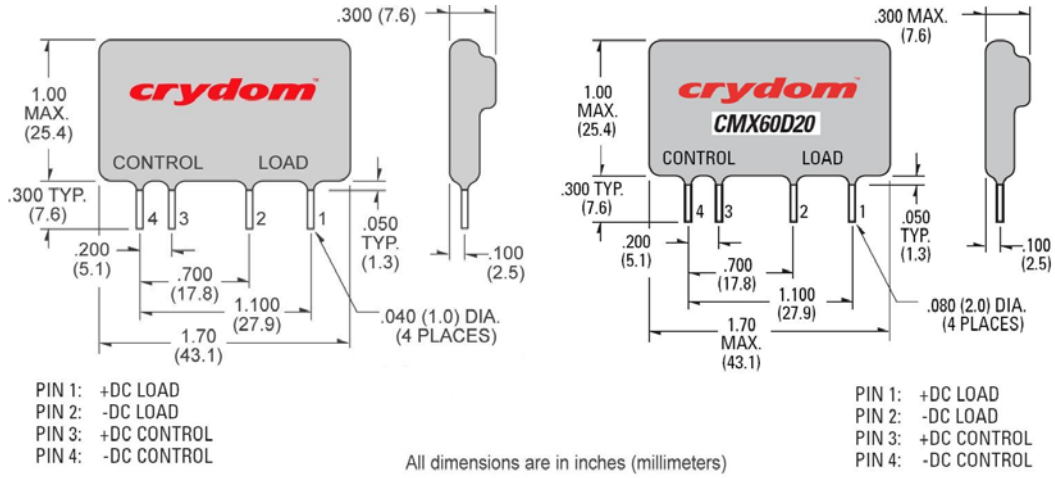


## WIRING DIAGRAM

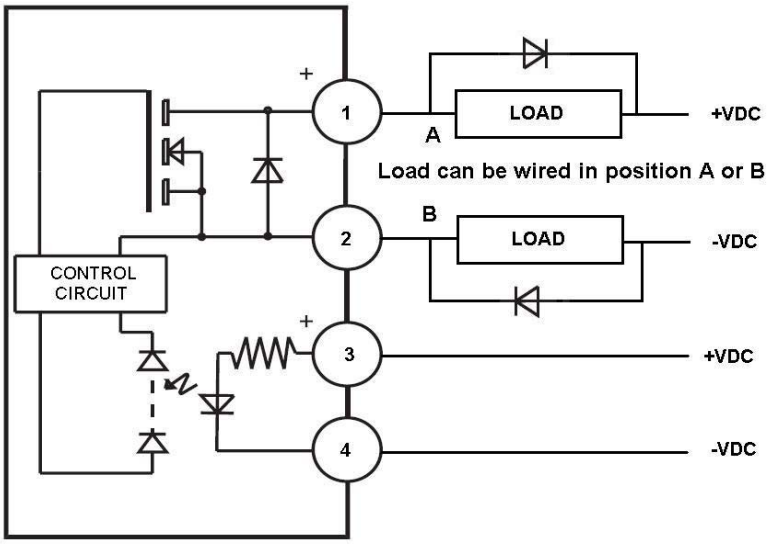



Copyright © 2012 Crydom Inc. Specifications subject to change without notice.

## THERMAL DERATE INFORMATION

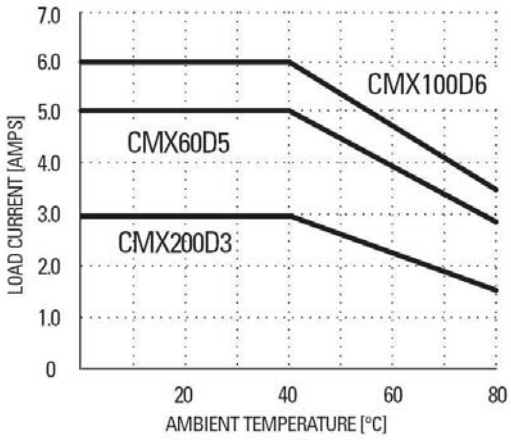


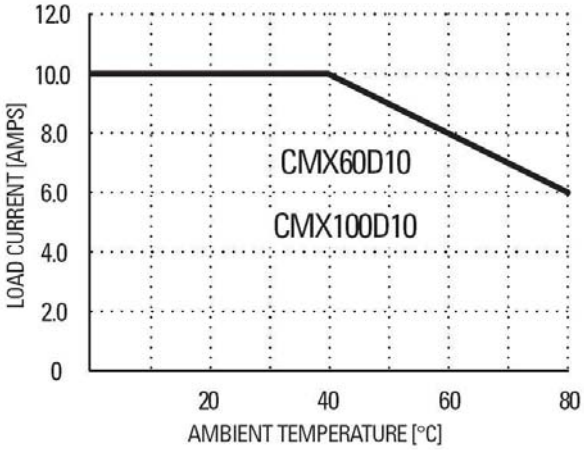


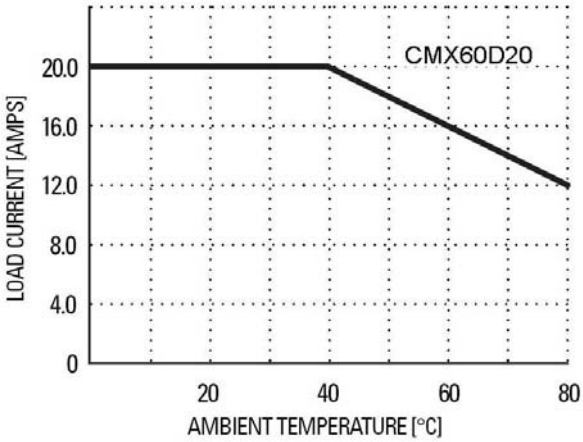


## AGENCY APPROVALS

Designed in accordance with the requirements of IEC 62314
EN60950 : Meets the requirements of sections1.5: 1,7: 2.9: 2.10.5.3: 4.2: 4.5: 4.7:

E116950(3 Amps, 6 Amps and 10 Amps Models)

Rev. 120911


Copyright © 2012 Crydom Inc. Specifications subject to change without notice.

## ⚠ DANGER / PELIGRO / DANGER /GEFAHR / PERICOLO / PERIGO

**HAZARD OF ELECTRIC SHOCK, EXPLOSION, OR ARC FLASH.**

- Disconnect all power before installing or working with this equipment.
- Verify all connections and replace all covers before turning on power.

**Failure to follow these instructions will result in death or serious injury.**

**RIESGO DE DESCARGA ELECTRICA O EXPLOSION.**

- Desconectar todos los suministros de energia a este equipo antes de trabajar con este equipo.
- Verificar todas las conexiones y colocar todas las tapas antes de energizer el equipo.

**El incumplimiento de estas instrucciones puede provocar la muerte o lesiones serias.**

**RISQUE DE DESCHARGE ELECTRIQUE OU EXPLOSION**

- Eteindre toutes les sources d'énergie de cet appareil avant de travailler dessus de cet appareil
- Vérifier tous connections, et remettre tous couverts en olace avant de mettre sous

**De non-suivi de ces instructions provoquera la mort ou des lésions sérieuses sérieuses.**

**GEFAHR EINES ELEKTRISCHE N SCHLAGES ODER EINER EXPLOSION.**

- Stellen Sie jeglichen Strom ab, der dieses Gerät versorgt, bevor Sie an dem Gerät Arbeiten durchführen
- Vor der Inbetriebnahme alle Anschlüsse überprüfen und alle Gehäuseteile montieren.

**Unterlassung dieser Anweisungen können zum Tode oder zu schweren Verletzungen führen.**

**RISCHIO DI SCOSSA ELETTRICA O DELL'ESPLOSI ONE.**

- Spenga tutta l'alimentazion e che fornisce questa apparecchiatu ra prima del lavorare a questa apparecchiatu ra
- Verificare tutti i collegamenti e sostituire tutte le coperture prima della rotazione sull'alimentazi one

**L'omissione di seguire queste istruz ioni provocherà la morte o di lesioni serie**

**RISCO DE DESCARGA ELÉTTRICA OU EXPLOSÃO**

- Desconectar o equipamento de toda á energia antes de instalar ou trabalhar com este equipamen to
- Verificar todas as conexões e recolocar todas as tampas antes de religar o equipamento

**O não cumprimento destas instruções pode levar á morte ou lesões sérias.**

## ⚠ WARNING / AVERTISSEMENT / WARNUNG /ADVERTENCIA / AVVERTENZA / AVISO

**RISK OF MATERIAL DAMAGE AND HOT ENCLOSURE**

- The product's side panels may be hot, allow the product to cool before touching.
- Follow proper mounting instructions including torque values.
- Do not allow liquids or foreign objects to enter this product.

**Failure to follow these instructions can result in serious injury, or equipment damage.**

**RISQUE DE DOMMAGE MATERIEL ET DE SURCHAUFFE DU BOITIER**

- Les panneaux latéraux du produit peuvent être chauds. Laisser le produit refroidir avant de le toucher.
- Respecter les consignes de montage, et notamment les couples de serrage.
- Ne pas laisser pénétrer de liquide ni de corps étrangers à l'intérieur du produit.

**Le non-respect de cette directive peut entraîner, des lésions corporelles graves ou des dommages matériels.**

**GEFAHR VON MATERIALSCHÄDEN UND GEHÄUSEERHITZUNG**

- Die Seitenwände können heiß sein. Lassen Sie das Produkt abkühlen, bevor Sie es berühren.
- Beachten Sie die Montageanweisungen,
- Führen Sie keine Flüssigkeiten oder Fremdkörper in das Produkt ein.

**Die Nichtbeachtung dieser Anweisung kann Körperverletzung oder Materialschäden zur Folge haben.**

**RIESGO DE DAÑOS MATERIALES Y DE SOBRECALENTAMIENTO DE LA UNIDAD**

- Los paneles laterales del producto pueden estar calientes. Esperar que el producto se enfríe antes de tocarlo.
- Respetar las instrucciones de montaje, y en particular los pares de apretado.
- No dejar que penetren líquidos o cuerpos extraños en el producto.

**Si no se respetan estas precauciones pueden producirse graves lesiones, daños materiales.**

**RISCHIO DI DANNI MATERIALI E D'INVOLUCRO CALDO**

- I pannelli laterali dell'apparecchio possono scottare; lasciar quindi raffreddare il prodotto prima di toccarlo.
- Seguire le istruzioni di montaggio corrette.
- Non far entrare liquidi o oggetti estranei in questo apparecchio.

**La mancata osservanza di questa precauzione può causare gravi rischi per l'incolumità personale o danni alle apparecchiature.**

**RISCO DE DANO MATERIAL E DE AQUECIMENTO**

- Os painéis laterais do produto podem estar quentes; dê tempo ao produto para arrefecer antes de lhe tocar.
- Siga devidamente as instruções de montagem.
- Não permita a entrada de líquidos e de objectos estranhos no produto.

**A não observância destas precauções pode provocar a morte, ferimentos graves ou danos materiais.**


Copyright © 2012 Crydom Inc. Specifications subject to change without notice.

## ANNEX - ENVIROMENTAL INFORMATION

**The environmental information disclosed in this annex including the EIP Pollution logo are in compliance with People's Republic of China Electronic Industry Standard SJ/T11364 – 2006, Marking for Control of Pollution Caused by Electronic Information Products.**

| Part Name | Toxic or hazardous Substance and Elements | | | | | |
|---|---|---|---|---|---|---|
| | Lead (Pb) | Mercury (Hg) | Cadmium (Cd) | Hexavalent Chromium (Cr (VI)) | Polybrominated biphenyls (PBB) | Polybrominated diphenyl ethers (PBDE) |
| Semiconductor die | X | O | O | O | O | O |
| Solder | X | O | O | O | O | O |

此附件所标示的包括电子信息产品污染图标的环保信息
符合中华人民共和国电子行业标准 **SJ/T11364 - 2006,**
电子信息产品污染控制标识要求

| 部件名称 | 有毒有害物质或元素 | | | | | |
|---|---|---|---|---|---|---|
| | 铅 (Pb) | 汞 (Hg) | 镉 (Cd) | 六价铬 (Cr (VI)) | 多溴联苯 (PBB) | 多溴二苯醚 (PBDE) |
| 半导体芯片 | X | O | O | O | O | O |
| 焊接点 | X | O | O | O | O | O |


Copyright © 2012 Crydom Inc. Specifications subject to change without notice.